SRB
Split Roller Bearings

from
REVOLVO LIMITED

INNOVATIONS

Innovation in

P E R F O R M A N C E

SRB is Taking the Initiative.

The complete range of split roller bearings incorporates a number of innovative features that assist not only the user in terms of product performance, but also the maintenance engineer with fitting and assembly benefits.

From concept, to production and then throughout the life cycle of the unit, no other split bearing manufacturer works so hard to exceed your expectations.

The SRB range has been designed and developed to maximise service life of all the bearing components.

- **Machined Brass Cage** accommodates higher speed and temperatures as well as acceleration forces, whilst at the same time, reducing noise.
- **Robust Support Design** includes double webs and thick sections of high grade cast iron to enhance product life through rigidity and strength.
- **Profiled Rolling Elements** minimise damaging edge stress and accommodate minor dynamic misalignment.
- **Light, Medium and Heavy Series** ensure an exact match of bearing performance to your specification.
- **Comprehensive Range of Supports** to suit an extensive number of applications.

Material Benefits

- **Premium Quality Profiled High Chrome Steel** rolling elements provide optimum rolling contact.
- **250 Grade High Strength Cast Iron** (BS EN1561:1997) used for its excellent strength, durability and ability to absorb shock loads.
- **Solid Machined Brass Cage** used throughout the range for its many advantageous properties.

Standard Support with Complete Housing & Bearing

Flange Support

Innovation in
APPLICATION

The benefits of a totally split to the shaft bearing are long established with savings in production and maintenance well documented. However, split roller bearings are now being selected for a wide range of applications based on other benefits they provide including;

- **High Radial Load and Speed Capability** offering life and performance advantages.
- **Initially Self Aligning** minimising expensive alignment of other equipment.
- **Wide Range of Standard Supports** removing the cost of machining special cast iron supports.
- **Flexible Sealing Arrangements** extending bearing life in harsh environments.
- **Interchangeability,** each sub-assembly (support, housing and bearing) is universally interchangeable within our own range and those of other manufacturers.

Maintenance Friendly

- **New Single Piece Cage Clip Design,** offering not only accurate cage alignment but also offering the maintenance engineer a free hand whist assembling.
- **Pry Slots** on all dowelled machined joints for easy separation of the support.
- **Intuitive Assembly** made easy by features and markings to ensure correct positioning and orientation of all parts.

Take Up
Tension Unit
Complete
with Housing

Take Up
Pull Unit

Hanger
Unit

Innovation in SERVICE

Producing products that push the boundaries of performance is only the beginning. SRB recognise that users and specifiers of split roller bearings demand logistical, technical and after sales support. Continuous improvement in these services has enabled SRB to win customers. Immediate response and reaction to industry's requirements, enables SRB to assist customers from concept, through consultation, commissioning, training, supply and on site support.

- **Cellular Manufacturing** provides flexibility for the production of both standard and specialised units.
- **Modular Stocking** improves product availability and delivery times.
- **Dedicated CNC Plant** improves process and quality control.
- **Bespoke Designs,** supported by experienced bearing engineers and CAD systems.
- **Application Support Engineers** are available to discuss application detail and for site visits.
- **Local Support** through authorised distributor network worldwide.

Innovation in

SPLIT ROLLER BEARINGS

Interchangeable with SN/SD plummer blocks

The New compact Split Plummer Block Bearing from SRB is the first split cylindrical roller bearing assembly to be interchangeable with standard SN and SD series plummer blocks, bringing the benefits of a split design to a much wider audience.

Split roller bearings offer dramatically reduced downtime in maintenance and replacement situations, but could not previously be used in many bearing applications because of their dimensional incompatibility with standard plummer block sizes.

Key benefits of the New Split Plummer Block are:

- SRB SN & SD Series supports are dimensionally interchangeable with SN5.. and SD31.. range of plummer blocks
- Significant reductions in the time required to change trapped bearings
- Savings in downtime, improved machine availability
- Simplified mounting procedures, no feeler gauges
- Improved sealing efficiency, seals remain concentric to the shaft, unlike spherical roller bearings
- Efficient use of Maintenance Engineering resources
- Improved reliability, able to accommodate thermal expansion of the shaft within the bearing envelope

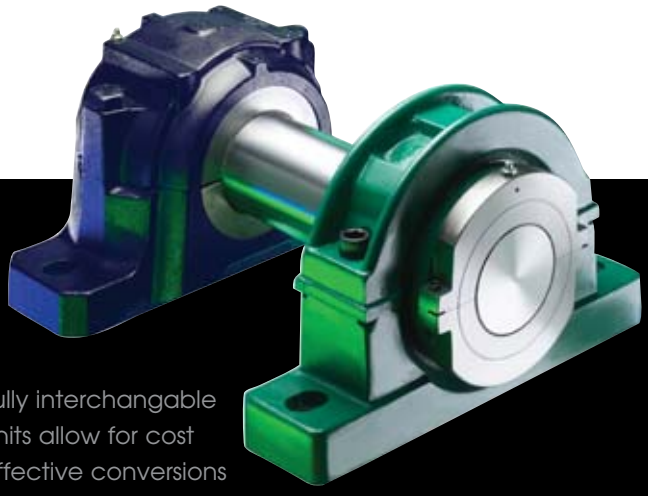

Fully interchangable units allow for cost effective conversions from SN/SD plummer blocks

Cast iron plummer blocks accommodating adapter sleeve mounted spherical roller bearings are amongst the most common types in use, supporting rotating shafts in everything from conveyors and fans to line shafts. Yet their replacement is often time consuming and difficult due to the removal of adjacent equipment. Replacing a typical bearing mounted in a cast iron plummer block can take anything from 6 hours to several days, in contrast, it can take as little as 1-2 hours to replace an SRB bearing unit.

SRB offer a complete design and manufacturing service for special and bespoke applications. Examples include: Ball Mill Support Bearings, Water Cooled Continuous Casters, Industrial High Pressure Pump Bearings, Wire Strander Bearings, Rotary Biological Contactor Support Bearings, Special Seal Design Options.

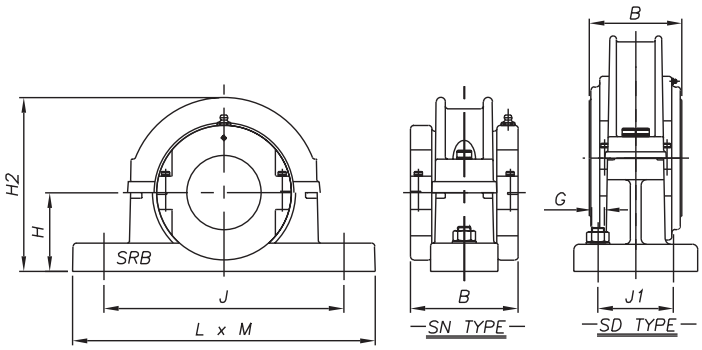

SRB REF	SN / SD REF	H	H2	B	J x J1	L x M	G	SHAFT SIZE
SN01	SN 50 8	60	135	84	170	205 x 60	12	ø 35
	SN 50 9							ø 40
SN02	SN 51 1	70	155	96	210	255 x 70	16	ø 50
SN 03	SN 51 3	80	180	102	234	275 x 70	16	ø 60
SN 03 A	SN 51 5					280 X 70		ø 65
SN 04	SN 51 6	95	208	112	260	315 x 90	20	ø 70
	SN 51 7							ø 75
SN 05	SN 518	100	230	134	290	345 x 100	20	ø 80
SN 05 A	SN 51 9	112	242					ø 85
SN 05 B	SN 520				320	380 x 110	24	ø 90
SN 06	SN 522	125	265	132	350	410 x 120	24	ø 100
SN 07	SN 524	140	300	140	350	410 x 120	24	ø 110
SN 07 A	SN 526	150	310		380	445 x 130		ø 115
SN 08	SN 528	150	354	154	420	500 x 150	30	ø 125
SN 09	SN 530	160	369	166	450	530 x 160	30	ø 135
SN 09 A	SN 532	170	379	166	470	550 x 160	30	ø 140
SD 10	SD 3134	170	379	172	430 x 100	510 x 180	24	ø 150
SD 11	SD 3136	180	396	172	450 x 110	530 x 190	24	ø 160
SD 12	SD 3138	190	417	172	480 x 120	560 x 210	24	ø 170
SD 12 A	SD 3140	210	437		510 x 130	610 x 230	30	ø 180
SN 13	SD 3144	220	457	172	540 x 140	640 x 240	30	ø 200
SD 14	SD 3148	240	510	176	600 x 150	700 x 260	30	ø 220
SD 15	SD 3152	260	545	188	650 x 160	770 x 280	36	ø 240
SD 16	SD 3156	280	589	204	670 x 160	790 x 280	36	ø 260
SD 16 A	SD 3160	300	609		710 x 190	830 x 310		ø 280
SD 17	SD 3164	320	662	216	750 x 200	880 x 330	36	ø 300

Specialist & Customised

PRODUCTS

SRB offer a complete design and manufacturing service for special and bespoke applications.

Examples include:

Ball Mill Support Bearings,

Water Cooled Continuous Casters,

Industrial High Pressure Pump Bearings,

Wire Strander Bearings,

Rotary Biological Contactor Support Bearings,

Special Seal Design Options.

Revolvo are committed to providing a service that contributes to the optimisation of your plant efficiency by providing specialised bearing solutions in both SRB split bearing and RRP solid rolling element bearings.

Our approach of working closely with customers allows us to continuously refine and improve our products, production processes and service procedures.

Authorised Distributors Stamp

Making the world go round

REVOLVO

SRB Split Roller Bearings

Revolvo Ltd. Angel Street, Queens Cross, Dudley, West Midlands, DY1 1QW
Tel: +44 (0) 1384 844250 • **Fax:** +44 (0) 1384 458345 • **e-mail:** srb.sales@revolvo.com • **web:** www.revolvo.com